OPERATING INSTRUCTIONS

eãÂ°ãÂtýÅ°ÁtcÓÂtðúÅý°c¦ê Ïtû€âcýÇ½c¦ðê㼰ýÁÎÇãäÂt»ÂÎðýÂtÇãt¦ê ÏtcÓÂtÁÅÀêt¼Åtû°êÁtáÅÅútcÓÂ étû€t°tã°ÎÂtúã°¼Ått
ßÎtcÓÂtÁÅÀêt¼Ått¦ãtú°ãäÂÁtðê†cðt°tcÓtýÁtú°ýcÇtûc¦ãtût é úÁý°c¦ëÂtcÓ°ctcÓÂäÂtt€âcýÇ½c¦ðêãt°ãäðt»Åtú°ãäÂÁtðêt¦ÈtcÓt¦c¦tt
2êãÇýÂtcÓ°ctcÓÂt°cðé t¦gÅýtt¦ãt¼ð é ú°c¦»ãÂtÈtcÓtcÓÂtã¦üC¦Átû€ãÇt°ýÂtCãt¦ê Ïtt

Preparation

ô)ÓÅ¼át»ÂÎðýÂtCãÅtcÓ°ct°ããtú°ýcãt°ýÂtCêÁ° é ° ÏÂÁt°êÁtÈðýát¦ê Ït¼ðýýÅ¼cãGt

ô vêã¼ýÅËtcÓÂtúC é úttÎýð é tcÓÂtc°êát

ô ;ÌããtcÓÂt¼°ê¦ãcÅýtÈtcÓtã¦üC¦ÁtCútcðtcÓÂtt é °ëttãÅëÅãt

ô I¼ýÅËtcÓÂtúC é útÓÅ°Átðêt°êÁtc¦Ï ÓcÅêt¦ctãðtcÓ°ctcÓÂt¼°ê¦ãcÅýtãtãÅ°ãÅÁt°êÁt°ýc¦Ï Ócttt¦Îtc¦ctãtêðcýt¦ctEt¦ãät»Åt
t é úðãät»ãÅt¦Îðýtúý Åãã ČýÅtcðt»Č¦ãÁtCút

Usage

ô eČ é útt°ÎýtêcðtcÓÂtc°êátCãt¦ê Ïtc ÓÂtúttãcðêtt°ýðČêÁtQKtcðtqKtúC é útt é ðëÅ é Âêcãtt
ß é úðýc°êc¦tßctûatêðctúðãät»ãÅtcðt Ï ÂêÅý°cÅt é ðýÂtúýÅãäČýÅtt¦êtcÓ°êtãúÁ¼Î¦ÅÁttqÓÅtãúý°ĜÅýãt°ýÅtÎtcc ÅÁtÈtcÓt
°êtautomatic relief valvet

ô eýÅãäãtcÓÂtãúý°Gt»Čccðêtcðtãúý°Gtt (GtcČýêt¦ê Ïtc ÓÂtãúý°GtêČc¦ttĜðCt¼°êtãÅctcÓÂtÁÅaÎýÅÁtãúý°Gtú°cc Åýêt¼é ¦ãct ∫ tt Åc¼t
qðtCãÅtcÓÂt¼ðêc¦êČðCãtãúý°Gt¦ê Ït¡ÎČê¼c¦ðêt¦tCãÅtcÓÂtãÅëÅýt°êÁtÅê Ï ° Ï Âtc ÓÂt°ýýÃãc¦ê Ï táêð»t»Gtú CãÓt¦ê Ïtt¦c
Îðý È °ýÁttqÓÂt¼ðêc¦êČðCãtãúý°GtÎČê¼c¦ðêt¦tCãÅtcÓÂtãÅëÅ¼ °c¦ãë°cÁÁt° Ï °t€t»GtúCãät¦ê Ït t» °¼átcÓÂt°ýýÃãc¦ê Ï táêð»tðýt»Gt
°¼cČ°c¦ê Ïtc ÓÂtãúý°GtãÅëÅýt

ðt qÓÅt°»¦ãtCGtcðtãúý°GtÅëÅêãGt°êÁtÈtcÓðČct°êGtúýð»ãÅ é ãtt¦ãtÁÅúÂêÁÅêct¦ðêtcÓÂtCãÅtðÎt°t¼ãÅ°êtãúý°Gt° ÏÂêct
T t€t¼Ó é t¼°ãät°êÁtÈ°cÅýtcÓðýðC ÏÓãGtúýtðýtcðtt¦Îtãät¦ê Ït
eãÂ°ãÅtêðcÁtcÓÂtCã° ÏÂtt¦êãéýC½c¦ðêãtðÎtcÓÂtt¼ÓÅ é t¼°ãt é °êČÎ°¼cČýÅýt

After usage

ô [ê¼ÅtGðCtÓ°ëÅtÎt¦êtãÓÁÁtãúý°Gt¦ê Ï t¦tCêãt¼ýÅ ê tcÓÂtãúý°GtÓÅ°Átãäð ÈãGtcðt°ãäð ÈtcÓÂtúýÅãäČýÅtcðtÅãt¼°úÅt

ô . ðtêðctúðČýtýÅãtÁCÅãtt€cðtÁý°t êãtt¦tê ãcÅ°Aýtt¦Åtãúðãät¦ðtcÓÂ étêt°t¼ðýÁ°ê¼Åt È tcÓtcÓÂtt¦êãéýC½c¦ðêãtðÎtcÓÂt
é °êČÎ°¼cČýÅýtðÎtcÓÂtãt¦üC¦Átqóêt¼ÅÂÁtê Ï tọKwt) Åãät¦Cãt

ô Uðctcãtcãt°ÎÂtGtÁ°c°tãÓÅÂctðÎtcÓÂtãt¦üC¦Áýãt é °êČÎ°¼cČýÅýt

ô ßêÎðý é °c¦ðêtðêtcÓÂtýÅãt¦ãc°ê¼Åtúýðúýc¦Åãtðît cÓÂtúã°ãc¦½°êÁtãÂ°ããtðÎtcÓÂt) ð é úýÅãäÂÁt _ ¦ýt I úý°ĜÅý¼°êt»Åt¦ÎðČêÁ
ČêÁÅýtÈ È Ètð¼cðJúČ é úttÁÅt

ô UÅëÅýt°¦é tcÓÂtãúý°ĜÅýt°ctúÅðúãÅtðýt°ê¦é °ããt

ô qÓÅt é °êČÎ°¼cČýÅýtût€êcãt¦°»ãÂt¦ÎðýtÅ° é ° ÏÂt¼°ČãÁÁt»Gtê¼ðýýÅ¼ctCã° ÏÂtðýtČê°ČcÓðýtãÅÁt é ðÁ¦Î¦¼°c¦ðêãtðÎtcÓÂtÁÅëÎ¼Åt

Maintenance and care

ô [¦ãtcÓÂtúC é úttú¦ãcðêt¦Îýð é tc¦ é Âtcðtc¦ é Âtt€ãÅÂtãĜ é »ðãtðêtcÓÂtãúý°Gt»Čccðêt

ô)ÓÅ¼átcÓ°ctcÓÂtêðgĝãÅt°êÁtãÅëÅt°ctcÓÂtÂêÁtðÎtcÓÂtÒðãÅtãtÎýÅÂtðÎtÁÅúðãÅcãtt
vãÅt¼ð é úýÃãäÂÁt°¦ytcðt¼ãÅ°êtcÓÂtêðgĝãÅtðýtãÅëÅtÎ¦tctûãt»ãð¼ãÅÁt

ô ßÎt°tú°ýctûãtëÅ»âGtÁ° é ° ÏÂÁtðýtÈðýêýtýÅúã°¼Ått¦ctt [êãGtCãÅtðýÎ¦êã°ãtú°ýcãt

OCTO PUMP
THE CHEMICAL SPRAYER



360°

OCTOSPRAY SOLVE 1200

SOLVENT

OCTOPUMP
Lã´ ÏÂýtеå°ãĊ¦át< é »@t‰Lã´ ÏÂýt I úý°GtêÏ t¦qÅ¼ÓêðãðÏGt‰eðýcêÅýãcý°ĆÅt ĵ Q‰t ĵ ŽpQŽt UÅCã´Ć

PART LIST

190ƀ	¼ðêćÎêČðČāƀāúý°ĜƀÎČê¼ćÎðê
180	2ýÏð<ýÎú
175ƀ	āÅ°ā
174ƀ	êðġġāÅƀā¼ýÅĖ
173ƀ	êðġġāÅ
171ƀ	āĖÎýāƀúÎÅ¼Å
169ƀ	»°āāƀǫǮǨƀÎČê¼ćÎðêƀ
168ƀ	»°āāƀÏýÎúúÅý
167ƀ	ÎāÅěÎ»āÅƀǫǮǨƀćČ»Å
166ƀ	»ðććāÅƀðƎýÎêÏƀǫǮƀǨƀěƀǪƀǨƀ
165ƀ	ě°āěÅƀā¼ýÅĖƀ¼°úƀ
164ƀ	ě°āěÅƀāúýÎêÏ
163ƀ	ě°āěÅƀúāČêÏÅý
162ƀ	ðƎýÎêÏƀǫƀǨƀěƀǫƀǨƀ
161ƀ	úČéúƀ¼ĜāÎêÉÅý
150ƀ	ýÅć°ÎêÎêÏƀÁÎāáƀ
140ƀ	úā°āćÎ¼ƀ»°āā
130ƀ	¼āÎú
120ƀ	úČéúƀÏČÎÁÅƀýðÁ
110ƀ	úāČêÏÅý
100ƀ	ā¼ýÅĖ
90ƀ	ðƎýÎêÏƀǫƀǨƀěƀǨƀǫƀ
80ƀ	ðƎýÎêÏƀǨǪƀǨƀěƀǫƀǫƀ
70ƀƀ	úýÅāāČýÅƀāúýÎêÏƀ
60ƀ	āúýÎêÏ
50ƀ	āĖÎýāƀ¼ðêÅƀ
40ƀ	ćýÎÏÏÅý
30ƀ	āÎÁƀýðÁƀ
20ƀ	úČéú
10ƀ	āúý°ĜÅýƀćðú

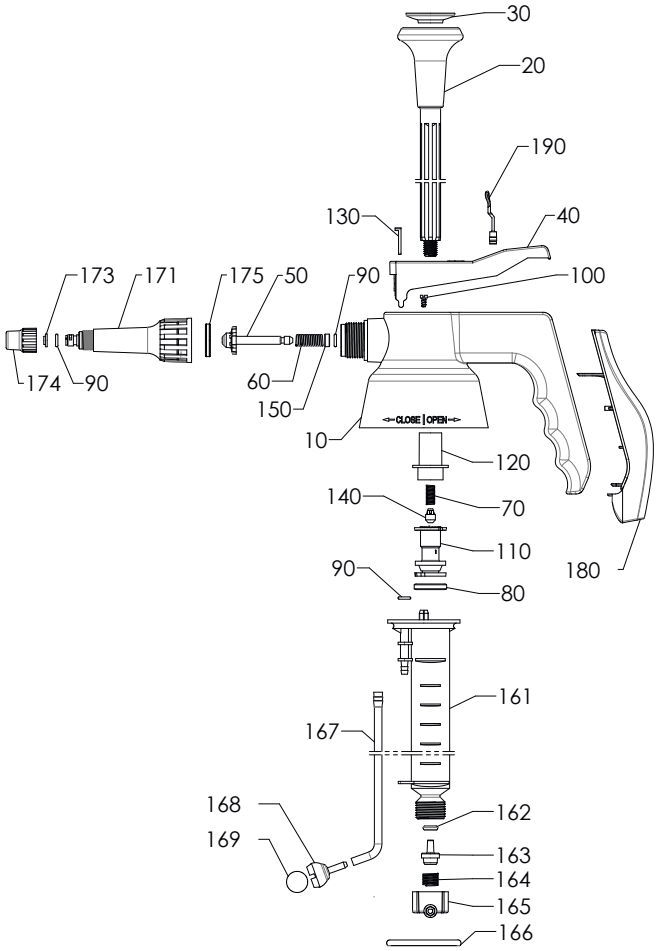

DO

ō āðāěÅêćƎ»°āÅÁƀāÎüČÎÁāƀ

DON'T

ō °¼ÎÁÎ¼ƀāÎüČÎÁā

ō °āá°āÎêÅƀ°êÁƀ°ā¼ðÓðāÎ¼ƀāÎüČÎÁā

ō °ÏÏýÅāāÎěÅƀāðāěÅêćƀéÎěćČýÅāƀ¼ðêć°ÎêÎêÏƀ°¼ÅćðêÅ, T2L

ō úČýÅƀāðāěÅêćāƀāČ¼Óƀ°āƀ°¼ÅćðêÅƀ°êÁƀ¼āÅ°êÅýā

ō °ÏÏýÅāāÎěÅƀ°¼ÎÁÎ¼ƀāÎüČÎÁā

_āĖ°ĜāƀýÅāÅ°āÅƀćÓÅƀúýÅāāČýÅýƀ¼ðéúāÅćÅāĜƀÅéúćĜƀćÓÅƀāúý°ĜÅýƀ°ÎćÅýƀČāÅýƀ°êÁƀýÎêāÅƀÎćƀćÓðýðČÏÓāĜƀĖÎćÓƀĖ°ćÅýƀðýƀ°āČÎć°»āÅƀ¼āÅ°êÎêÏƀ°ÏÅêćƀƀqÓÎāƀúýðćÅ¼ćāƀćÓÅƀāÅ°āāƀ°êÁƀā°ěÅāƀéðêÅĜƀƀNČ»ýÎ¼°ćÅƀćÓÅƀúČéúƀýðÁƀýÅÏČā°ýāĜƀƀ

You want more?

OPERATING INSTRUCTIONS

eäÅ°äÅtýÅ°ÁtcÓÅtðúÅý°ct¦ê Ïtûêäcý Ć½ct¦ðêäb¼°ýÁÎČääĜb»ÂÎðýÅtČäţê Ïtc ÓÅtáÅÅáëb¼Åyb°êÁtáÅÅÁútcÓÅ étûêb°tã°ÎÅtúã°¼Åt
bÎtcÓÅtúÅÅëb¼Åtţãtúº°ãäÅÁtðêtcðb°tcÓţýÁtú°ýcĜyţctţäţû éúÅý°ct¦ëÅtcÓ°ctcÓÅäÅtûêäcý Ć½ct¦ðêäb°ãäðb»Åtú°ääÅÁtðêt¦ÈţcÓtţctt
2êäČýÅtcÓ°ctcÓÅb°ćð éţgÅýtţäţ¼ð éú°ct¦»äÅtţÈţcÓtcÓÅtäţüČţÁtĜðČb°ýÅtţČäţê Ïţ

Preparation

ô)ÓÅ¼áţ»ÂÎðýÅtţČäÅtcÓ°ct¦°ãäţú°ýcäţb°ýÅtţČêÁ° é ° ÏÅÁţ°êÁtţÈðýáţê Ïţ¼ðýýÅ¼čäĜţ

ô vêä¼ýÅËtcÓÅtúČ éúţÎýð étcÓÅtc°êáţ

ô ;ţääţcÓÅb¼°êţäćÅýţÈţcÓtäţüČţÁtČúţcðtcÓÅţ¢ é °ëţäÅëÅäţ

ô I¼ýÅËtcÓÅtúČ éúţÓÅ°Áţðêţ°êÁtcţ ÏÓćÅêţcţäðtcÓ°ctcÓÅb¼°êţäćÅýţäţäÅ°åÅÁţ°êÁţ°ýcţ ÏÓctţtÎţcţäţêðćţţcţËţääţ»Åţ
ţé úðääţ»äÅţÎðýţúýÅääČýÅţcðţ»ČţäÁţCúţ

Usage

ô eČ éúţ°ýţûêćðtcÓÅtc°êáţCäţê ÏtcÓÅţúţäćðêţ¢°ýðČêÁţQKtcðţqKţúČ éúţé ðëÅ éÂêćäţ
ß éúðýc°êć¢ßcţûäţêðctúðääţ»äÅtcðţ ÏÂêÅý°ćÅţ é ðýÅţúýÅääČýÅţûêţcÓÅtc°êáţcÓ°êţäúÁ¼ÎţÅÁţqÓÅţäúý°ĜÅýäţ°ýÅţÎţcćÅÁţÈţcÓţ
°êţautomatic relief valveţ

ô eýÅääţcÓÅţäúý°Ĝţ»Čććðêtcðţäúý°Ĝţ(ĜtcČýêţê Ïtc ÓÅţäúý°ĜţêČćţţĜðČ¼°êţäÅctcÓÅţÁÅäţýÅÁţäúý°Ĝţú°ććÅýêţ¢é ţäćţ ∫ ţţÅć¼ţ
qÓÅţä°ÎÅćĜţ»Čććðêţ é Čäćţ»ÅţúČääÅÁţ»»¼áţ»ÂÎðýÅtcÓÅţäúý°Ĝţ»Čććðêţ¼°êţ»ÅţúýÅääÅÁţ

ô bÎtĜðČţÈ °êćtcðţäÈţc¼Ótcðtcðtcðt

PART LIST

190ƀ	ā°ÎÅćĜƀÎČê¼ćÛðêƀƀ
180	2ýÏð<ýÛú
175ƀ	āÅ°ā
174ƀ	êðġġāÅƀā¼ýÅĖ
173ƀ	êðġġāÅ
171ƀ	āĖÛýāƀúÛÅ¼Å
168ƀ	ÎÛāćÅý
167ƀ	āČ¼ćÛðêƀćČ»Å
166ƀ	»ðććāÅƀðɟýÛêÏƀǫǮƀĶƀěƀǪƀĶƀ
165ƀ	ě°āěÅƀā¼ýÅĖƀ¼°úƀ
164ƀ	ě°āěÅƀāúýÛêÏ
163ƀ	ě°āěÅƀúāČêÏÅý
162ƀ	ðɟýÛêÏƀǫƀĶƀěƀǫƀĶ
161ƀ	úČéúƀ¼ĜāÛêÁÅý
150ƀ	ýÅć°ÛêÛêÏƀÁÛāáƀ
140ƀ	úā°āćÛ¼ƀ»°āā
130ƀ	¼āÛú
120ƀ	úČéúƀÏČÛÁÅƀýðÁƀ
110ƀ	úāČêÏÅý
100ƀ	ā¼ýÅĖ
90ƀ	ðɟýÛêÏƀǫƀĶƀěƀĶƀǫ
80ƀ	ðɟýÛêÏƀĶǪƀĶƀěƀǫƀǫƀ
70ƀƀ	ƀúýÅāāČýÅƀāúýÛêÏƀ
60ƀ	úýÛêÏ
50ƀ	āĖÛýāƀ¼ðêÅ
40ƀ	ćýÛÏÏÅýƀ
30ƀ	āÛÁƀýðÁƀ
20ƀ	úČéú
10ƀ	āúý°ĜÅýƀćðú

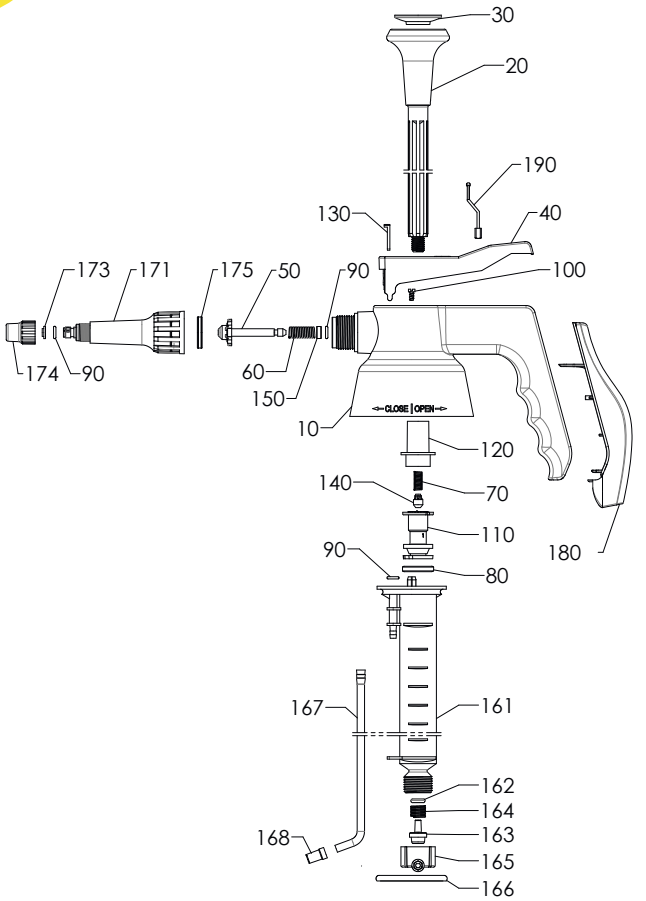

DO

ō °¼ÛÁÛ¼ƀāÛüČÛÁāƀ

pH value
ŧ kƀČúƀćðƀDZÿǭ

DON'T

ō āðāěÅêćɟ»°āÅÁƀāÛüČÛÁā
ō °āá°āÛêÅƀ°êÁƀ°ā¼ðÓðāÛ¼ƀāÛüČÛÁā
ō °ÏÏýÅāāÛěÅƀāðāěÅêćƀéÛěćČýÅāƀ¼ðêć°ÛêÛêÏƀ°¼ÅćðêÅƀ
°êÁƀT2L
ō úČýÅƀāðāěÅêćāƀāČ¼Óƀ°āƀ°¼ÅćðêÅƀ°êÁƀ¼āÅ°êÅýā
ō °ÏÏýÅāāÛěÅƀ°¼ÛÁÛ¼ƀāÛüČÛÁā

_āĖ°ĜāƀýÅāÅ°āÅƀćÓÅƀúýÅāāČýÅýƀ¼ðéúāÅćÅāĜƀÅéúćĜƀćÓÅƀāúý°ĜÅýƀ°ÎćÅýƀČāÅýƀ°êÁƀýÛêāÅƀÛćƀćÓðýðČÏÓāĜƀĖÛćÓƀ
Ė°ćÅýƀðýƀ°āČÛć°»āÅƀ¼āÅ°êÛêÏƀ°ÏÅêćƀƀqÓÛāƀúýðćÅ¼ćāƀćÓÅƀāÅ°āāƀ°êÁƀā°ěÅāƀéðêÅĜƀƀNČ»ýÛ¼°ćÅƀćÓÅƀúČéúƀýðÁƀ
ýÅÏČā°ýāĜƀƀ

You want more? ↗

OPERATING INSTRUCTIONS

b e ã Å ° ã Å t ý Á ° Á t ¢ Ó Å t ð ú Å ý ° c ¼ c ì ð ê ã t ½ ° ý Å Î Č ä ã Ĝ t » Å Î ð ý Å t Č ã ì ê Ï t ¢ Ó Å t Á Å Æ ½ Å y t ° ê Á t á Å Å ú t ¢ Ó Å é t ù ê t ° t ã ° Î Å t ú ã ° ¼ Å t t
ß Î t ¢ Ó Å t Á Å Æ ½ Å t ù ã t ú ° ã ã Å Á t ð ê t ¢ ð t ° t ¢ Ó ì ý Á t ú ° ý c Ĝ t ú ¢ t ì ã t ù é ú Å ý ° c ì ë Å t ¢ Ó ° ¢ t ¢ Ó Å ã Å t ù ê ã é ý C ¼ c ì ð ê ã t ° ã ã ð t » Å t ú ° ã ã Å Á t ð ê t È ì ¢ Ó t ù ¢ t t t ò
2 ê ã Č ý Å t ¢ Ó ° ¢ t ¢ Ó Å t ° ¢ ð é ì ĝ Å ý t ì ã t ½ ð é ú ° c ì » ã Å t È t ¢ Ó t ¢ Ó Å t ã ì ü Č ì Á t ú Ĝ ð Č t ° ý Å t Č ã ì ê Ï t

Preparation

ô) Ó Å ¼ á t » Å Î ð ý Å t Č ã Å t ¢ Ó ° ¢ t ° ã ã t ú ° ý ¢ á t ° ý Å t Č ê Á ° é ° Ï Å Á t ° ê Á t È ð ý á t ê Ï t ½ ð ý ý Å ¼ ¢ ã Ĝ t

ô v ê ã ¼ ý Å È t ¢ Ó Å t ú Č é ú t ì Î ý ð é t ¢ Ó Å t ¢ ° ê á t

ô ; ì ã ã t ¢ Ó Å t ½ ° ê ì ã ¢ Å ý t È t ¢ Ó t ã ì ü Č ì Á t Č ú t ¢ ð t ¢ Ó Å t ¢ é ° ë ¢ ã Å ë Å ã t

ô I ¼ ý Å È t ¢ Ó Å t ú Č é ú t Ó Å ° Á t ð ê t ° ê Á t ¢ ì Ï Ó ¢ Å ê t ¢ ì ã ð t ¢ Ó ° ¢ t ¢ Ó Å t ½ ° ê ì ã ¢ Å ý t ì ã t ã Å ° ã Å Á t ° ê Á t ° ý c ì Ï Ó ¢ t ½ Î t ¢ ¢ t ì ã t ê ð ¢ ý t ¢ ¢ t È ì ã ã t » Å t
ì é ú ð ã ã ì » ã Å t Î ð ý t ú ý Å ã ã Č ý Å t ¢ ð t » Č ì ã Á t Č ú / t

Usage

ô e Č é ú t ° ì ý t ê ¢ ð t ¢ Ó Å t ¢ ° ê á t Č ã ì ê Ï t ¢ Ó Å t ú ì ã ¢ ð ê t ½ ° ý ð Č ê Á t Q Ǩ t ¢ ð t ǩ t ú Č é ú t é ð ě Å é Å ê ¢ ã / t t ß é ú ð ý ¢ ° ê ¢ t ¢ ¢ Ó t ý Å t ¢ ì ã ¢ ð ê t ¢ ð t ¢ ú ð ã ã ì » ã Å t ¢ ð t
Ï Å ê Å ý ° ¢ Å t é ð ý Å t ú ý Å ã ã Č ý Å t ì ê t ¢ Ó Å t ¢ ° ê á t ¢ Ó ° ê t á ú Å ¼ ì Î ì Á Á t q Ó Å t ã ú ý ° Ĝ Å ý ã t ° ý Å t ì Î ¢ ¢ Å Á t È ¢ Ó t ° ê t **automatic relief valve** t

ô e ý Å ã ã t ¢ Ó Å t ã ú ý ° Ĝ t » Č ¢ ¢ ð ê t ¢ ð t ã ú ý ° Ĝ t (Ĝ t ¢ Č ý é ì ê Ï t ¢ Ó Å t ã ú ý ° Ĝ t ê Č ¢ ý t Ĝ ð Č t ½ ° ê t ã Å ¢ t ¢ Ó Å t ã Å Å ã ì ý Å Á t ã ú ý ° Ĝ t ú ° ¢ ¢ Å ý ê t ½ é ì ã ¢ t ì ∫ t t Å ¢ / t
q ð t Č ã Å t ¢ Ó Å t ½ ð ê ¢ ì ê Č ð Č ã Ĝ t ã ú ý ° Ĝ t ì ê Ï t Î Č è ½ ¢ ì ð ê t ý t Ĝ ã Å t ¢ Ó Å t ã Å ë Å ý t ° ê Å t Å ê Ï ° Ï Å t ¢ Ó Å t ° ý ý Å ã ¢ ì ê Ï t á ê ð » t » Ĝ t ú Č ã Ó t ì ê Ï t ¢ ¢
Î ð ý È ° ý Á t q Ó Å t ¼ ð ê ¢ ì ê Č ð Č ã Ĝ t ã ú ý ° Ĝ t Î Č è ¼ ¢ ì ð ê t ì ã t Á Å ° ¼ ¢ ì ě ° ¢ Á Á t ° Ï ° ì ê t » Ĝ t ú Č ã ã ì ê Ï t á ê ð » t ð ý t » Ĝ t
° ¼ ¢ Č ° ¢ ì ê Ï t ¢ Ó Å t ã ú ý ° Ĝ t ã Å ë Å ý t

ô ß Î t Ĝ ð Č t È ° ê ¢ t ¢ ð t ã È t ¢ ½ Ó t ¢ ð t ¢ Ó Å t ã Č ú t ã ì Å Á t Î ã ° ¢ t ã ú ý ° Ĝ t ê ð ģ ģ ã Å ý t ý Å é ð ě Å t ¢ Ó Å t ê ð ģ ģ ã Å t Ó Å ° Á t ì ê ¼ Č Á t ê Ï t ¢ Ó Å t ½ ð ð ý Á Á t ê ð ģ ģ ã Å t ° ê Á t
° ¢ ¢ ° ¼ Ó t ¢ Ó Å t Î ã ° ¢ t ã ú ý ° Ĝ t » ° Ĝ ð Ê Å ¢ t ê ð ģ ģ ã Å t Ó Å ° Á t ã 2 ê ã Č ý Å t ¢ Ó ° ¢ t ¢ Ó Å t È Ó ¢ Å t q È ê ; ì ã ¢ Å ý t ã ã Å Ä ë Å t ì ã t ì ê ã Å ý ¢ Å Á ý t ° ê Á t ý ð ¢ ° ¢ Å t ¢ Ó Å t Ĝ Å ã ã ð È
Î ã ° ¢ t ã ú ý ° Ĝ t ê ð ģ ģ ã Å t ¢ ð t ¢ Ó Å t Á Å ã Å ý Á Á t ð ý t Å ê ¢ ° ¢ ì ð ê t

õ t q Ó Å t ° » ì ã t ¢ Ĝ t ¢ ð t ã ú ý ° Ĝ t Å ë Å ê ã Ĝ t ° ê Á t È t ¢ Ó ð Č ¢ t ° ê Ĝ t ú ý ð » ã Å é ã t ì ã t Å Å ú Å ê Á Å ê ¢ t ð ê t ¢ Ó Å t Č ã Å t ð Î t ½ ã Å ° ê t ã ú ý ° Ĝ t ° Ï Å ê ¢ t
T ì ë t ¼ Ó Å é ì ¼ ° ã ã t ° ê Á t È ° ¢ Å ý t ¢ Ó ð ý ð Č Ï Ó ã Ĝ t ú ý ì ð ý t ¢ ð t Î ì ã ã ì ê Ï t t h e ã Å ° ã Å t ê ð ¢ Å t ¢ Ó Å t Č ã ° Ï Å t Ê ã ć ý Č ¼ ¢ ì ð ê ã t ð Î t ¢ Ó Å t ½ Ó Å é ì ¼ ° ã t é ° ê Č Î ° ¼ ¢ Č ý Å ý t

After usage

ô [ê ¼ Å t Ĝ ð Č t Ó ° ë Å t Î ì ê ì ã Ó Å Á t ã ú ý ° Ĝ t ê Ï j t Č ê ã ½ ý Å È t ¢ Ó Å t ã ú ý ° Ĝ t Ó Å ° Á t ã ã ð È ã Ĝ t ¢ ð t ° ã ã ð È t ¢ Ó Å t ú ý Å ã ã Č ý Å t ¢ ð t Å ã ¼ ° ú Å t

ô . ð t ê ð ¢ t ú ð Č ý t ý Å ã ì Á Č Å ã t ì ê ¢ ð t Á ý ° ì ê Å t t ì ê ã ¢ Å ° Á j t Á ã t ú ð ã Å t ð Î t ¢ Ó Å é t ì ê t ° ½ ý ð ý Á ° ê ¼ Å t È t ¢ Ó t ¢ Ó Å t ì ê ã ¢ ý Č ¼ ¢ ì ð ê ã t ð Î t ¢ Ó Å t
é ° ê Č Î ° ¼ ¢ Č ý Å ý t ð Î t ¢ Ó Å t ã ì ü Č ì Á t ú q Ó Å ê ½ Å Á ° ê t ¢ Ó Å t ú Č é ú t » Ĝ t Č ã ì ê Ï t ì ¢ ¢ ¢ ð t ã ú ý ° Ĝ t ½ Å ° ê t È ° ¢ Å ý t ð ý t ã Č ¢ ° » ã Å t ½ Å ° ê ì ê Ï t ° Ï Å ê ¢ t

Safety

ô U Å ě Å ý t ã Å ° ë Å t ¢ Ó Å t ¢ ° ê á t ì ê t ° t ú ý Å ã ã Č ý ì ã Å Á t ã ¢ ° ¢ Å t Î ð ý t ã ð ê Ï t ú Å ý t ð Á ã t ð Î t ¢ ì é Å t

ô . ð t ê ð ¢ t Å ě ú ð ã Å t ¢ Ó Å t) ð é ú ý Å ã ã Å Á t _ ì ý t I ú ý ° Ĝ Å ý t ¢ ð t Á ì ý Å ¼ ¢ t ã Č ê ã ì Ï Ó ¢ t

ô . ð t ê ð ¢ ì Î ì ã ã t ° ê Ĝ t Ó ð ¢ t ã ì ü Č ì Á t ã Å ë ¼ Å Å Á ì ê Ï t ǫ Ǩ t) Å ã ã ì Č ã t

ô U ð ¢ Å t ¢ Ó Å t ã ¤ Î Á ¢ Ĝ t Á ° ¢ ° t ã Ó Å Å ¢ t ð Î t ¢ Ó Å t ã ì ü Č ì Á ý t ã t é ° ê Č Î ° ¼ ¢ Č ý Å ý t

ô ¤ ê Î ð ý é ° ¢ ì ð ê t ð ê t ¢ Ó Å t ý Å ã ì ã ¢ ° ê ¼ Å t ú ý ð ú Å ý ¢ ì Å ã t ð Î t ¢ Ó Å t ú á ° ã ¢ ½ ° ê Á t ã Å ° ã ã t ð Î t ¢ Ó Å t) ð é ú ý Å ã ã Å Á t _ ì ý t I ú ý ° Ĝ Å ý t ¼ ° ê t » Å t Î ð Č ê Á
Č ê Á Å ý t È È t ð ¼ ¢ ð J ú Č é ú t Á Å t

ô U Å ě Å ý t ° ì é t ¢ Ó Å t ã ú ý ° Ĝ Å ý t ° ¢ t ú Å ð ú ã Å t ð ý t ° ê Î é ° ã ã t

ô q Ó Å t é ° ê Č Î ° ¼ ¢ Č ý Å ý t ì ã t ê ð ¢ ã Å t Î ð ý t Á ° é ° Ï Å t ½ ° Č ã Å Á t » Ĝ t ê ¼ ð ý ý Å ¼ ¢ t Č ã ° Ï Å t ð ý t Č ê ° Č ¢ Ó ð ý t ã Å Á t é ð Á Î t ¼ ° ¢ ì ð ê ã t ð Î t ¢ Ó Å t Á Å ë t ¼ Å t

Maintenance and care

ô [ì ã t ¢ Ó Å t ú Č é ú t ú ì ã ¢ ð ê t Î ý ð é t ¢ ì é Å t ¢ ð t ¢ Ì é Å t ã Å Å t ã Ĝ é » ð ã t ð ê t ¢ Ó Å t ã ú ý ° Ĝ t » Č ¢ ¢ ð ê t
e ã Å ° ã Å t ð ê ã Ĝ t Č ã Å t ã ì ã ¼ ð ê Å t ð ì ã Å 7 Ï ý Å ° ã Å ã t Î ð ý t ã Č » ý t ¼ ° ¢ ã Å t ð Î t ¢ Ó Å t 2 e . T t ã Å ° ã ã t

ô) Ó Å ¼ á t ¢ Ó ° ¢ t ¢ Ó Å t ê ð ģ ģ ã Å t ° é Á t ã Å ë Å t ° ¢ t ¢ Ó Å t Â ê Á t ð Î t ¢ Ó Å t Ð ð ã Å t ã ì Î ý Å Å t ð Î t Å Å ú ð ã Å ¢ ã t t
v ã Å ¼ ð é ú ý Å ã ã Å Á t ° ì ý t ¢ ð t ¼ á Å ° ê t ¢ Ó Å t ê ð ģ ģ ã Å t ð ý t ã Å ë Å ú Î t ¢ ì ã t » ã ð ¼ á Å Á t

ô ß Î t ° t ú ° ý ¢ ì ã t ë Å » ã Ĝ t Á ° é ° Ï Å Á t ð ý t Ë ð ý ê ÿ ý Å ú ª ¼ Å t ì ¢ t t [ê ã Ĝ t Č ã Å t ð ý ì Ï ì ê ° ã t ú ° ý ¢ ã t

OCTO PUMP
THE CHEMICAL SPRAYER



OCTOSPRAY CLEAN 1000

ALKALIS

PART LIST

190ƀ	¼ðêćÎêČðČāƀāúý°ĜƀÎČê¼ćÎðêƀƀ
180	2ýÏð<ýÎú
175ƀ	āÅ°ā
174ƀ	êðġġāÅƀā¼ýÅĖ
173ƀ	êðġġāÅ
171ƀ	āĖÎýāƀúÎÅ¼Å
168ƀ	ÎÎāćÅý
167ƀ	āČ¼ćÎðêƀćČ»Å
166ƀ	»ðććāÅƀðɟýÎêÏƀǫǮƀĶƀëƀǪƀĶƀ
162ƀ	éÅé»ý°êÅ
161ƀ	úČéúƀ¼ĜāÎêÁÅý
150ƀ	ýÅć°ÎêÎêÏƀÁÎāáƀ
140ƀ	úā°āćÎ¼ƀ»°āā
130ƀ	¼āÎú
120ƀ	úČéúƀÏČÎÁÅƀýðÁƀ
110ƀ	úāČêÏÅý
100ƀ	ā¼ýÅĖ
90ƀ	ðɟýÎêÏƀǫƀĶƀëƀĶƀǫƀ [
80ƀ	ðɟýÎêÏƀĶǪƀĶƀëƀǫƀǫƀ
70ƀƀ	úýÅāāČýÅƀāúýÎêÏƀ
60ƀ	āúýÎêÏ
50ƀ	āĖÎýāƀ¼ðêÅƀ
40ƀ	ćýÎÏÏÅýƀƀ
30ƀ	āÎÁƀýðÁƀ
20ƀ	úČéú
10ƀ	āúý°ĜÅýƀćðú

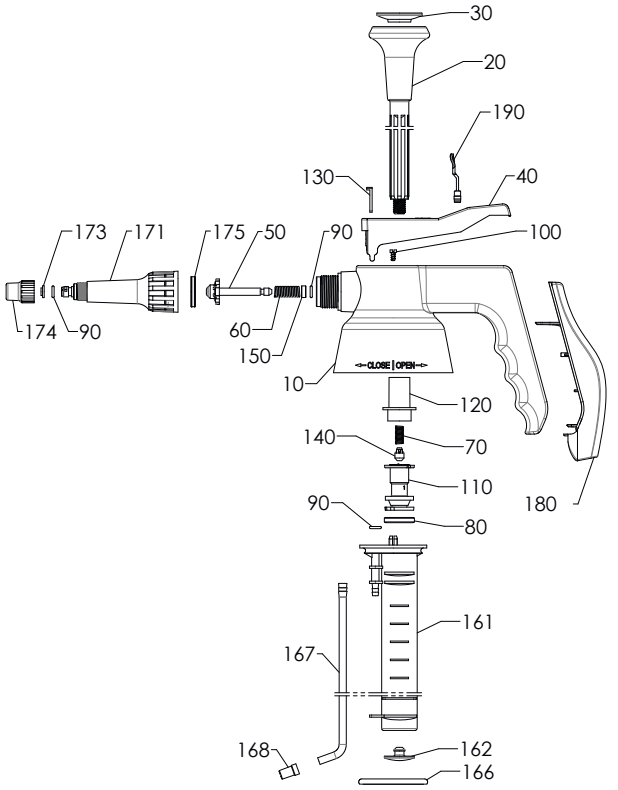

DO

ō °āá°āÎêÅƀ°êÁƀ°ā¼ðÓðāÎ¼ƀāÎüČÎÁā

pH value
ǰƀČúƀćðƀĶǪ

DON'T

ō °¼ÎÁÎ¼ƀāÎüČÎÁā
ō āðāěÅêćɟ»°āÅÁƀāÎüČÎÁā
ō °ÏÏýÅāāÎěÅƀāðāěÅêćƀéÎěćČýÅāƀ¼ðêć°ÎêÎêÏƀ°¼ÅćðêÅ,ƀ
T 2L
ō úČýÅƀāðāěÅêćāƀāČ¼Óƀ°āƀ°¼ÅćðêÅƀ°êÁƀ¼āÅ°êÅýā
ō °ÏÏýÅāāÎěÅƀ°¼ÎÁÎ¼ƀāÎüČÎÁā

_āĖ°ĜāƀýÅāÅ°āÅƀćÓÅƀúýÅāāČýÅýƀ¼ðéúāÅćÅāĜƀÅéúćĜƀćÓÅƀāúý°ĜÅýƀ°ÎćÅýƀČāÅýƀ°êÁƀýÎêāÅƀÎćƀćÓðýðČÏÓāĜƀĖÎćÓƀ
Ė°ćÅýƀðýƀ°āČÎć°»āÅƀ¼āÅ°êÎêÏƀ°ÏÅêćƀƀqÓÎāƀúýðćÅ¼ćāƀćÓÅƀāÅ°āāƀ°êÁƀā°ěÅāƀéðêÅĜƀƀNČ»ýÎ¼°ćÅƀćÓÅƀúČéúƀýðÁƀ
ýÅÏČā°ýāĜƀƀ

You want more? ↗

OPERATING INSTRUCTIONS

eãÅ°ãÅ½ýÅ°ÁŧćÓÁŧðúÅý°ćíê Ï½êãćýČ¼ćíðêã½°ýÁÎČãäĜŧ»ÂÎðýÁŧČã‰ê Ï ŧćÓÁŧÁÅÀê½Å½ŧ°êÁŧáÅÅúŧćÓÅ é ½êŧ°ŧã°ÎÂŧúã°¼Åŧŧ
ßÎŧćÓÁŧÁÅÀê½Å½ŧãŧúŧ°ãäÅÁŧðêŧćðŧ°ŧćÓÍýÁŧú°ýćĜ½ŧćíŧãŧů é úÅý°ćíëÅŧćÓ°ćŧćÓÅãÅ½ŧêãćýČ¼ćíðêãŧ°ãäðŧ»Åŧú°ãäÅÁŧðêŧÈ‰ćÓŧćíŧ
2êãČýÁŧćÓ°ćŧćÓÅŧ°ćð é ŧĜÅý½ŧãŧ¼ð é ú°ćí»ãÅŧÈ‰ćÓŧćÓÅŧãŧüČíÁŧĜðČŧ°ýÁŧČã‰ê Ï ŧ

Preparation

ð)ÓÅ¼áŧ»ÂÎðýÅŧČãÅŧćÓ°ćŧ°ãäŧú°ýćãŧ°ýÅŧČêÁ° é ° Ï ÅÁŧ°êÁŧÈðýá‰ê Ï ŧ¼ðýýÅ¼čãĜŧ

ð vêã¼ýÅËŧćÓÅŧúČ é úŧÎýð é ŧćÓÅŧć°êáŧ

ð ;Îãäŧŧŧ°»ðČćŧÓ°ãÎŧðÎŧćÓÅŧ»ðććãÅŧÈ‰ćÓŧãŧüČíÁŧ¡ ŧćÓŧćÓÅŧ ; ð° é Åýãŧúćŧ‰ãŧÅãäÅêćí°ãŧćðŧÓ°ëÅŧŧ°ŧã°ý Ï Åýŧúýãäč‰ýÅŧ¼ČãÓíðêŧ
ćðŧ°¼ÓíÅëÅŧ°ŧãðê Ï Åýŧãúý°Ĝí‰Ï ŧćí é Åŧ

ð I ¼ýÅËŧćÓÅŧúČ é úŧÓÅ°Áŧðêŧ°êÁŧćí Ï ÓćÅêŧúćŧãðŧćÓ°ćŧćÓÅŧ¼°ê‰ãćÅýŧ‰ãŧãÅ°åÁÁŧ°êÁŧ°ĺýćí Ï Ócŧ‰Ûí‰ŧúćŧ‰ãŧêðćýŧúćŧÈ‰ãäŧ»Åŧ
Ûé úðãäŧ»åÅŧÎðýŧúýÅäãČýÅŧćðŧ»Č‰ãÁŧČúŧ

Usage

ð eČ é úŧ°ÎýŧêćðŧćÓÅŧć°êáŧČã‰ê Ï ŧćÓÅŧúŧãćðêŧŧ°ýðČêÁŧQĶŧćðŧQĶŧúČ é úŧ é ðëÅ é Åêćąŧ‰ÁÅúÅêÁãŧðêŧ»ðććãÅŧãŧ‰gÅ¼ŧ
eãÅ°ãÅŧêðćÅ½ŧćÓÅŧ»ÅãćíÎð° é ŧýÅãČãćŧ¼°êŧðêãĜŧ»ÁýÅ°åŧgÅÁŧÈ‰ćÓŧÎČäãŧúýÅäãČýÅŧ
ß é úðýć°êć‰ßćŧúãŧêðćŧúðãäå»ãÅŧćðŧ Ï ÂêÅý°ćÅŧ é ðýÅŧúýÅäãČýÅŧúêŧćÓ°êŧãúÅ¼Î‰ÅÁŧqÓÅŧãúý°ĜÅýãŧ°ýÅŧÎ‰ćÅÁŧÈ‰ćÓŧ
°êŧ**automatic relief valve**ŧ

ð eýÅäãŧćÓÅŧãúý°Ĝŧ»Čććðêŧćðãúý°Ĝŧ
qðŧČãÅŧćÓÅŧ½ðêćíêČðČãŧãúý°Ĝí‰Ï ŧÎČè¼ćíðêŧúČãÅŧćÓÅŧãÅëÅýŧ°êÁŧÅê Ï ° Ï ÅŧćÓÅŧ°ýýÅäćíê Ï ŧáêð»ŧ»ĜŧúČãćÓíê Ï ŧ‰ć
Îðýȁ°ýÁŧqÓÅŧ½ðêćíêČðČãŧãúý°ĜŧÎČè¼ćíðêŧãŧÁÅ°¼ćíë°ćÁÁŧ° Ï °íêŧ»ĜŧúČäãíê Ï ŧ» °¼áŧćÓÅŧ°ýýÅäćíê Ï ŧáêð»ðýŧ»Ĝŧ
°¼ćČ°ćíê Ï ŧćÓÅŧãúý°ĜŧäÅëÅý‰

ð _ŧČêÎðý é ŧ°êÁŧúÅýÎÅ¼ćŧÎð° é ŧú°ććÅýêŧýÅüČíýÅäŧ°ŧ½åÅ°êŧíð° é íê Ï ŧ° Ï Âêćŧ
T ŧèŧ¼ÓÅ é ŧ¼°ãäŧ°êÁŧÈ °ćÅýŧćÓðýðČ Ï ÓãĜŧúýŧðýŧćðŧÎŧäãíê Ï ŧ
eãÅ°ãÅŧêðćÅŧćÓÅŧČã° Ï Åŧ‰êãćýČ¼ćíðêãŧðÎŧćÓÅŧ¼ÓÅ é ŧ¼°ãŧé °êČÎ°¼ćČýÅý‰

After usage

ð [ê¼ÅŧĜðČŧÓ°ëÅŧÎíêíãÓÅÁŧãúý°Ĝí‰Ï ýŧČêã¼ýÅÈŧćÓÅŧãúý°ĜŧÓÅ°Áŧãäðè‰Ĝŧćðŧ°ãäðÈŧćÓÅŧúýÅäãČýÅŧćðŧÅã¼°úÅŧ
eãÅ°ãÅŧêðćÅŧćÓ°ćŧÎð° é ŧ¼°êŧÅã¼°úÅŧÈÓŧãÅŧćÓÅŧ½ðêć°íêÅýŧãŧðúÅêÅÁ

ð . ðŧêðćŧúðČýŧýÅãíÁČÅãŧíêćðŧÁý°íêãŧíêãćÅ°ÁŧÁíãúðãÅŧðÎŧćÓÅ é ŧíêŧ°½ðýÁ°ê¼ÅŧÈíćÓŧćÓÅŧíêãćýČ¼ćíðêãŧðÎŧćÓÅŧ
é °êČÎ°¼ćČýÅýŧðÎŧćÓÅŧãŧüČíÁŧqÓÅê½ãÅ°êŧćÓÅŧúČ é úŧ»ĜŧČãíêÎŧćŧćðŧãúý°Ĝŧ½ãÅ°êŧÈ °ćÅýŧðýŧ‰ãČíć°»åÅŧ½ãÅ°êíê Ï ŧ° Ï Åêćŧ

ð híêãÅŧćÓÅŧãäÅëÅŧÈ‰ćÓŧíÎÂãćŧćÓðýðČ Ï ÓãĜŧíêŧðýÁÅýŧćðŧúýÅëÅêćŧãćí¼áíêÏ ŧ

Safety

ð UÅëÅýŧãÅ°ëÅŧćÓÅŧć°êáŧíêŧ°ŧúýÅäãČýŧãÅÁŧãć°ćÅŧÎðýŧãðêÏ ŧúÅýŧðÁãŧðÎŧćí é Åŧ

ð . ðŧêðćŧÅëúðãÅŧćÓÅŧ) ð é úýÅäãÅÁŧ _ ŧýŧ I úý°ĜÅýŧćðŧÁÓýÅ¼ćŧãČêãíÏ Ócŧ

ð . ðŧêðćŧíÎãäŧ°êĜŧÓðćŧãíüČíÁãŧÅë¼ÅÅÁíê Ï ŧqĶŧ) Åãäíčãŧ

ð Uðćíŧćŧãŧ°ÎÁćĜŧÁ°ć°ŧãÁÓÅÁćŧðÎŧćÓÅŧãíüČíÁýãŧ é °êČÎ°¼ćČýÅýŧ

ð UÅëÅýŧ°í é ŧćÓÅŧãúý°ĜÅýŧ°ćúÅðúãÅŧðýŧ°êí é °ãäŧ

ð qÓÅŧ é °êČÎ°¼ćČýÅýŧíãŧêðćŧãí°»åÅŧÎðýŧÁ° é ° Ï Å½°ČãÅÁŧ»Ĝŧíê¼ðýýÅ¼čŧČã° Ï Åŧðýŧčê°ČćÓðýíãÅÁŧ é ðÁíÎ¼°ćíðêãŧðÎŧćÓÅŧÁÅë½Åŧ

Maintenance and care

ð [ŧãŧćÓÅŧúČ é úŧúíãćðêŧÎýð é ŧćí é Åŧćðŧćí é Åŧ‰ãÅÅŧãĜ é »ðãŧðêŧćÓÅŧãúý°Ĝŧ»Čććðêŧ

ð)ÓÅ¼áŧćÓ°ćŧćÓÅŧêðggåÅŧ°êÁŧãíÅëÅŧ°ćŧćÓÅŧÅêÁŧðÎŧćÓÅŧÓðãÅŧíãŧÎýÅÅŧðÎŧÁÅúðãíčãŧ
vãÅ½ð é úýÅäãÅÁí°ýŧćð½åÅ°êŧćÓÅŧêðggåÅŧðýŧãíÅëÅŧíÎŧćíčãŧ»ãð¼åÅÁŧ

ð ßÎŧ°ŧú°ýćíãŧëíčãŧ»ãĜŧÁ° é ° Ï ÅÁŧðýŧËðýêýýÅúã°¼Åŧíćŧŧ [êãĜŧČãÅŧðýí Ï íê°ãŧú°ýćãŧ

OCTOPUMP
Lã´ Ï Åýŧeå°ãćíáŧ< é »@ŧ/ŧLã´ Ï ÅýŧI úý°ĜíêÏ ŧqÅ¼Óêðãð Ï Ĝŧ/ŧeðýćêÅýãćý°ĆÅŧ ĵ Ǭŧ/ŧ ĵ ŽǫǭŽŧUÅČã´Ć

OCTO PUMP
THE CHEMICAL SPRAYER



OCTOFOAM MULTI 750

ACID

PART LIST

10	sprayer top
20	pump
30	lid rod
40	trigger
50	swirl cone
60	spring
70	pressure spring
80	o-ring 14.0 x 3.5
90	o-ring 5.0 x 1.5
100	screw
110	plunger
120	pump guide rod
130	clip
140	plastic ball
150	retaining disk
161	pump cylinder
162	flatter valve
163	bottle o-ring 36.0 x 4.0
164	suction tube
165	air injector
166	filter
171	bayonet swirl piece
172	seal
173	bayonet nozzle
174	nozzle
175	seal
176/177	foam sleeve with felt
180	continuous spray function
190	ErgoGrip

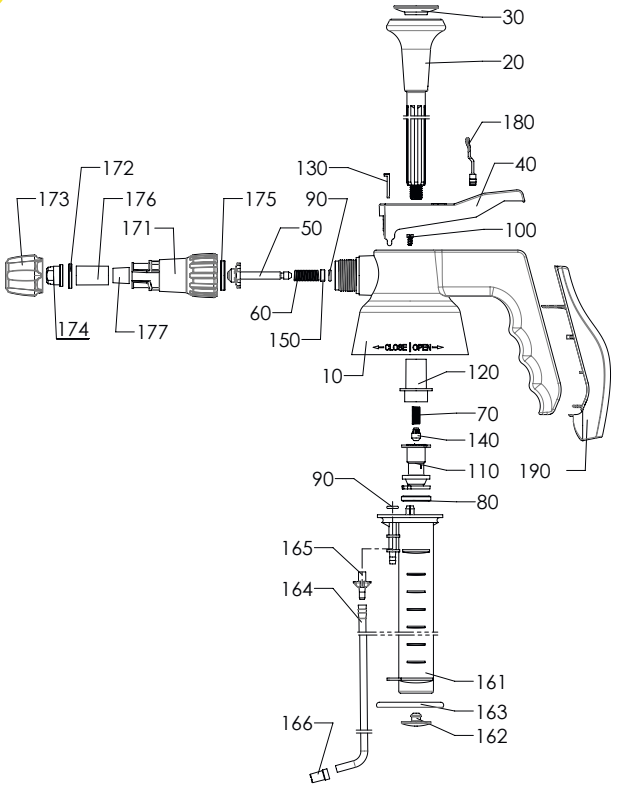

The Foamer has three different sleeves with inserted felts. The standard sleeve is already installed in the foam nozzle. The other two sleeves are used to individually adjust the foam pattern depending on the liquid used and the desired degree of foam.
Only liquids suitable for foaming can be applied with the sprayer

FOAM PATTERN ADJUSTMENT

- Unscrew the bayonet nozzle at the front
- Remove and replace the felt sleeve
- Screw on the bayonet nozzle

pH value
<1 up to 9,5

You want more? ↗

OPERATING INSTRUCTIONS

Please read the operating instructions carefully before using the device, and keep them in a safe place.
If the device is passed on to a third party, it is imperative that these instructions also be passed on with it.
Ensure that the atomizer is compatible with the liquid you are using.

Preparation

- Check before use that all parts are undamaged and working correctly.
- Unscrew the pump from the tank.
- Fill about half of the bottle with liquid. With the Foamers, it is essential to have a larger pressure cushion to achieve a longer spraying time.
- Screw the pump head on and tighten it so that the canister is sealed and airtight (if it is not, it will be impossible for pressure to build up).

Usage

- Pump air into the tank using the piston (around 20 to 40 pump movements, depends on bottle size).
  Please note: the best foam result can only be realized with full pressure.
  Important: It is not possible to generate more pressure in the tank than specified. The sprayers are fitted with an **automatic relief valve**.
- Press the spray button to spray.
  To use the continuous spraying function, use the lever and engage the arresting knob by pushing it forward. The continuous spray function is deactivated again by pulling back the arresting knob or by actuating the spray lever.
- A uniform and perfect foam pattern requires a clean foaming agent.
  Mix chemicals and water thoroughly prior to filling.
  Please note the usage instructions of the chemical manufacturer.

After usage

- Once you have finished spraying, unscrew the spray head slowly to allow the pressure to escape.
  Please note that foam can escape while the container is opened
- Do not pour residues into drains; instead, dispose of them in accordance with the instructions of the manufacturer of the liquid. Then clean the pump by using it to spray clean water or a suitable cleaning agent.
- Rinse the sleeve with felt thoroughly in order to prevent sticking.

Safety

- Never leave the tank in a pressurised state for long periods of time.
- Do not expose the Compressed Air Sprayer to direct sunlight.
- Do not fill any hot liquids exceeding 30° Celsius.
- Note the safety data sheet of the liquid's manufacturer.
- Never aim the sprayer at people or animals.
- The manufacturer is not liable for damage caused by incorrect usage or unauthorised modifications of the device.

Maintenance and care

- Oil the pump piston from time to time (see symbol on the spray button).
- Check that the nozzle and sieve at the end of the hose is free of deposits.
  Use compressed air to clean the nozzle or sieve if it is blocked.
- If a part is visibly damaged or worn, replace it. Only use original parts.

OCTOPUMP
Kläger Plastik GmbH | Kläger Spraying Technology | Portnerstraße 84 | 86356 Neusäß

OCTO PUMP
THE CHEMICAL SPRAYER



OCTOFOAM MULTI 1500

ACID

STÜCKLISTE | PART LIST

10	sprayer top
20	pump
30	lid rod
40	trigger
50	swirl cone
60	spring
70	pressure spring
80	o-ring 14.0 x 3.5
90	o-ring 5.0 x 1.5
100	screw
110	plunger
120	pump guide rod
130	clip
140	plastic ball
150	retaining disk
161	pump cylinder
162	flatter valve
163	bottle o-ring 36.0 x 4.0
164	suction tube
165	air injector
166	filter
171	bayonet swirl piece
172	seal
173	bayonet nozzle
174	nozzle
175	seal
176/177	foam sleeve with felt
180	continuous spray function
190	ErgoGrip

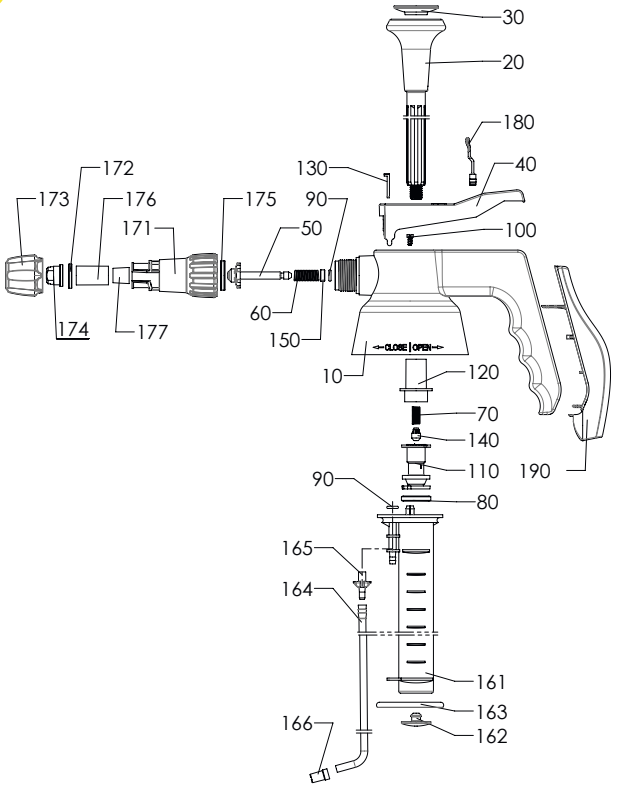

The Foamer has three different sleeves with inserted felts. The standard sleeve is already installed in the foam nozzle. The other two sleeves are used to individually adjust the foam pattern depending on the liquid used and the desired degree of foam.
Only liquids suitable for foaming can be applied with the sprayer.

FOAM PATTERN ADJUSTMENT

- Unscrew the bayonet nozzle at the front
- Remove and replace the felt sleeve
- Screw on the bayonet nozzle

pH value
<1 up to 9,5

You want more? ↗

OPERATING INSTRUCTIONS

Please read the operating instructions carefully before using the device, and keep them in a safe place.
If the device is passed on to a third party, it is imperative that these instructions also be passed on with it.
Ensure that the atomizer is compatible with the liquid you are using.

Preparation

- Check before use that all parts are undamaged and working correctly.
- Unscrew the pump from the tank.
- Fill about half of the bottle with liquid. With the Foamers, it is essential to have a larger pressure cushion to achieve a longer spraying time.
- Screw the pump head on and tighten it so that the canister is sealed and airtight (if it is not, it will be impossible for pressure to build up).

Usage

- Pump air into the tank using the piston (around 20 to 40 pump movements, depends on bottle size).
  Please note: the best foam result can only be realized with full pressure.
  Important: It is not possible to generate more pressure in the tank than specified. The sprayers are fitted with an **automatic relief valve**.
- Press the spray button to spray.
  To use the continuous spraying function, use the lever and engage the arresting knob by pushing it forward. The continuous spray function is deactivated again by pulling back the arresting knob or by actuating the spray lever.
- A uniform and perfect foam pattern requires a clean foaming agent.
  Mix chemicals and water thoroughly prior to filling.
  Please note the usage instructions of the chemical manufacturer.

After usage

- Once you have finished spraying, unscrew the spray head slowly to allow the pressure to escape.
  Please note that foam can escape while the container is opened
- Do not pour residues into drains; instead, dispose of them in accordance with the instructions of the manufacturer of the liquid. Then clean the pump by using it to spray clean water or a suitable cleaning agent.
- Rinse the sleeve with felt thoroughly in order to prevent sticking.

Safety

- Never leave the tank in a pressurised state for long periods of time.
- Do not expose the Compressed Air Sprayer to direct sunlight.
- Do not fill any hot liquids exceeding 30° Celsius.
- Note the safety data sheet of the liquid's manufacturer.
- Never aim the sprayer at people or animals.
- The manufacturer is not liable for damage caused by incorrect usage or unauthorised modifications of the device.

Maintenance and care

- Oil the pump piston from time to time (see symbol on the spray button).
  In the case of sprayers with EPDM seals, please only use silicone oil/greases for lubrication.
- Check that the nozzle and sieve at the end of the hose is free of deposits.
  Use compressed air to clean the nozzle or sieve if it is blocked.
- If a part is visibly damaged or worn, replace it. Only use original parts.

OCTOPUMP
Kläger Plastik GmbH | Kläger Spraying Technology | Portnerstraße 84 | 86356 Neusäß

OCTO PUMP
THE CHEMICAL SPRAYER



OCTOFOAM CLEAN 750

ALKALIS

PART LIST

10	sprayer top
20	pump
30	lid rod
40	trigger
50	swirl cone
60	spring
70	pressure spring
80	o-ring 14.0 x 3.5
90	o-ring 5.0 x 1.5
100	screw
110	plunger
120	pump guide rod
130	clip
140	plastic ball
150	retaining disk
161	pump cylinder
162	flatter valve
163	bottle o-ring 36.0 x 4.0
164	suction tube
165	air injector
166	filter
171	bayonet swirl piece
172	seal
173	bayonet nozzle
174	nozzle
175	seal
176/177	foam sleeve with felt
180	Daucontinuous spray function
190	ErgoGrip

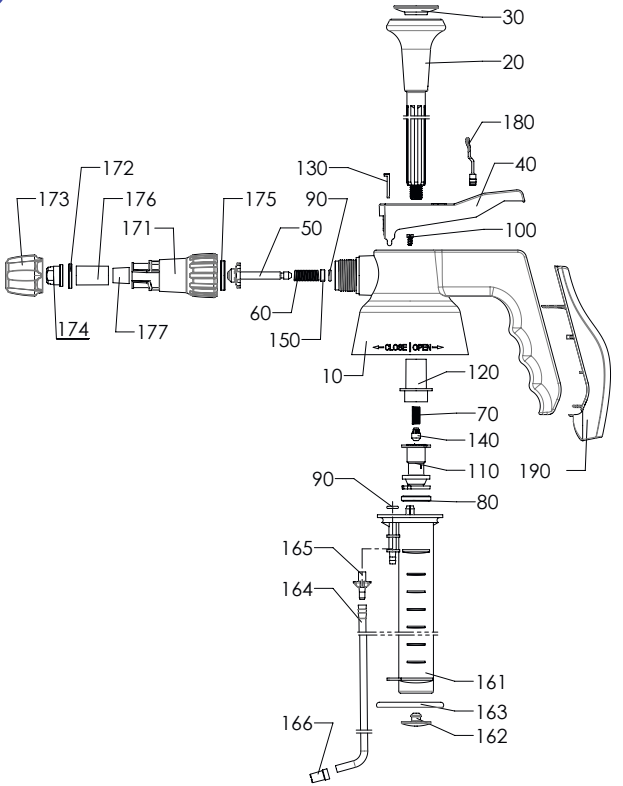

The Foamer has three different sleeves with inserted felts. The standard sleeve is already installed in the foam nozzle. The other two sleeves are used to individually adjust the foam pattern depending on the liquid used and the desired degree of foam.
Only liquids suitable for foaming can be applied with the sprayer.

FOAM PATTERN ADJUSTMENT

- Unscrew the bayonet nozzle at the front
- Remove and replace the felt sleeve
- Screw on the bayonet nozzle

pH value
8 up to 14

You want more? ↗

OPERATING INSTRUCTIONS

Please read the operating instructions carefully before using the device, and keep them in a safe place.
If the device is passed on to a third party, it is imperative that these instructions also be passed on with it.
Ensure that the atomizer is compatible with the liquid you are using.

Preparation

- Check before use that all parts are undamaged and working correctly.
- Unscrew the pump from the tank.
- Fill about half of the bottle with liquid. With the Foamers, it is essential to have a larger pressure cushion to achieve a longer spraying time.
- Screw the pump head on and tighten it so that the canister is sealed and airtight (if it is not, it will be impossible for pressure to build up).

Usage

- Pump air into the tank using the piston (around 20 to 40 pump movements, depends on bottle size).
  Please note: the best foam result can only be realized with full pressure.
  Important: It is not possible to generate more pressure in the tank than specified. The sprayers are fitted with an **automatic relief valve**.
- Press the spray button to spray.
  To use the continuous spraying function, use the lever and engage the arresting knob by pushing it forward. The continuous spray function is deactivated again by pulling back the arresting knob or by actuating the spray lever.
- A uniform and perfect foam pattern requires a clean foaming agent.
  Mix chemicals and water thoroughly prior to filling.
  Please note the usage instructions of the chemical manufacturer.

After usage

- Once you have finished spraying, unscrew the spray head slowly to allow the pressure to escape.
  Please note that foam can escape while the container is opened
- Do not pour residues into drains; instead, dispose of them in accordance with the instructions of the manufacturer of the liquid. Then clean the pump by using it to spray clean water or a suitable cleaning agent.
- Rinse the sleeve with felt thoroughly in order to prevent sticking.

Safety

- Never leave the tank in a pressurised state for long periods of time.
- Do not expose the Compressed Air Sprayer to direct sunlight.
- Do not fill any hot liquids exceeding 30° Celsius.
- Note the safety data sheet of the liquid's manufacturer.
- Never aim the sprayer at people or animals.
- The manufacturer is not liable for damage caused by incorrect usage or unauthorised modifications of the device.

Maintenance and care

- Oil the pump piston from time to time (see symbol on the spray button).
  In the case of sprayers with EPDM seals, please only use silicone oil/greases for lubrication.
- Check that the nozzle and sieve at the end of the hose is free of deposits.
  Use compressed air to clean the nozzle or sieve if it is blocked.
- If a part is visibly damaged or worn, replace it. Only use original parts.

OCTOPUMP
Kläger Plastik GmbH | Kläger Spraying Technology | Portnerstraße 84 | 86356 Neusäß

OCTO PUMP
THE CHEMICAL SPRAYER



OCTOFOAM CLEAN 1500

ALKALIS

PART LIST

10	sprayer top
20	pump
30	lid rod
40	trigger
50	swirl cone
60	spring
70	pressure spring
80	o-ring 14.0 x 3.5
90	o-ring 5.0 x 1.5
100	screw
110	plunger
120	pump guide rod
130	clip
140	plastic ball
150	retaining disk Zylinderrohr | pump
161	cylinder Flatterventil-Membran | flatter
162	valve
163	bottle o-ring 36.0 x 4.0
164	suction tube
165	air injector
166	filter
171	bayonet swirl piece
172	seal
173	bayonet nozzle
174	nozzle
175	seal
176/177	foam sleeve with felt
180	continuous spray function
190	ErgoGrip

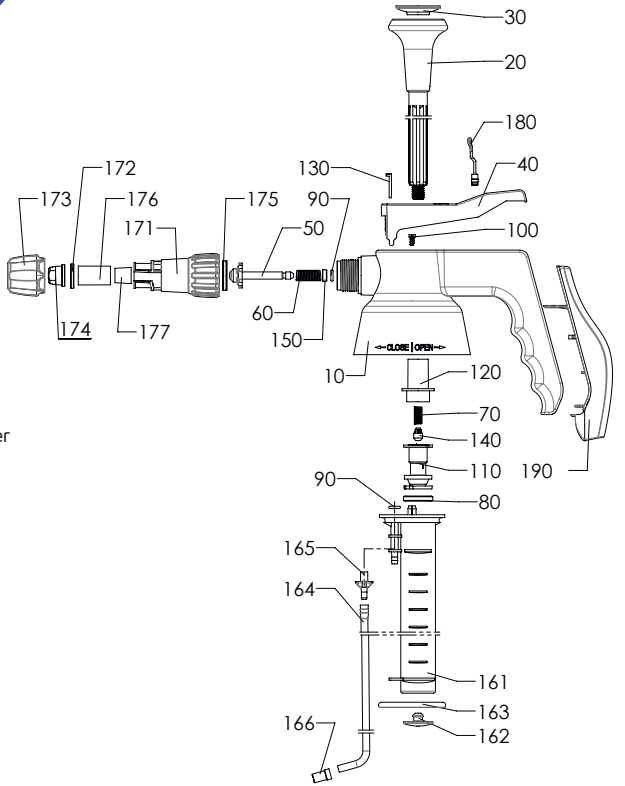

The Foamer has three different sleeves with inserted felts. The standard sleeve is already installed in the foam nozzle. The other two sleeves are used to individually adjust the foam pattern depending on the liquid used and the desired degree of foam.
Only liquids suitable for foaming can be applied with the sprayer.

FOAM PATTERN ADJUSTMENT

- Unscrew the bayonet nozzle at the front
- Remove and replace the felt sleeve
- Screw on the bayonet nozzle

pH value
8 up to 14

You want more? ↗

OPERATING INSTRUCTIONS

Please read the operating instructions carefully before using the device, and keep them in a safe place.
If the device is passed on to a third party, it is imperative that these instructions also be passed on with it.
Ensure that the atomizer is compatible with the liquid you are using.

Preparation

- Check before use that all parts are undamaged and working correctly.
- Unscrew the pump from the tank.
- Fill the canister with liquid up to the "max" level.
- Screw the pump head on and tighten it so that the canister is sealed and airtight (if it is not, it will be impossible for pressure to build up).

Usage

- Pump air into the tank using the piston (around 20 to 30 pump movements).
  Important: It is not possible to generate more pressure in the tank than specified. The sprayers are fitted with an **automatic relief valve**.
- Press the spray button to spray. By turning the spray nut, you can set the desired spray pattern (mist ↔ jet).
  To use the continuous spraying function, use the lever and engage the arresting knob by pushing it forward. The continuous spray function is deactivated again by pulling back the arresting knob or by actuating the spray lever.
- The ability to spray evenly and without any problems is dependent on the use of a clean spray agent.
  Mix chemicals and water thoroughly prior to filling.
  Please note the usage instructions of the chemical manufacturer.

After usage

- Once you have finished spraying, unscrew the spray head slowly to allow the pressure to escape.
- Do not pour residues into drains; instead, dispose of them in accordance with the instructions of the manufacturer of the liquid. Then clean the pump by using it to spray clean water or a suitable cleaning agent.

Safety

- Never leave the tank in a pressurised state for long periods of time.
- Do not expose the Compressed Air Sprayer to direct sunlight.
- Do not fill any hot liquids exceeding 30° Celsius.
- Note the safety data sheet of the liquid's manufacturer.
- Information on the resistance properties of the plastic and seals of the Compressed Air Sprayer can be found under www.octo-pump.de.
- Never aim the sprayer at people or animals.
- The manufacturer is not liable for damage caused by incorrect usage or unauthorised modifications of the device.

Maintenance and care

- Oil the pump piston from time to time (see symbol on the spray button).
- Check that the nozzle and sieve at the end of the hose is free of deposits.
  Use compressed air to clean the nozzle or sieve if it is blocked.
- If a part is visibly damaged or worn, replace it. Only use original parts.

OCTOPUMP
Kläger Plastik GmbH | Kläger Spraying Technology | Portnerstraße 84 | 86356 Neusäß

OCTO PUMP
THE CHEMICAL SPRAYER



OCTOSPRAY FOOD 1200

FOOD

PART LIST

190	continuous spray function
180	ErgoGrip
175	seal
174	nozzle screw
173	nozzle
171	swirl piece
168	filter
167	suction tube
166	bottle o-ring 36.0 x 4.0
162	membrane
161	pump cylinder
150	retaining disk
140	plastic ball
130	clip
120	pump guide rod
110	plunger
100	screw
90	o-ring 5.0 x 1.5
80	o-ring 14.0 x 3.5
70	pressure spring
60	spring
50	swirl cone
40	trigger
30	lid rod
20	pump
10	sprayer top

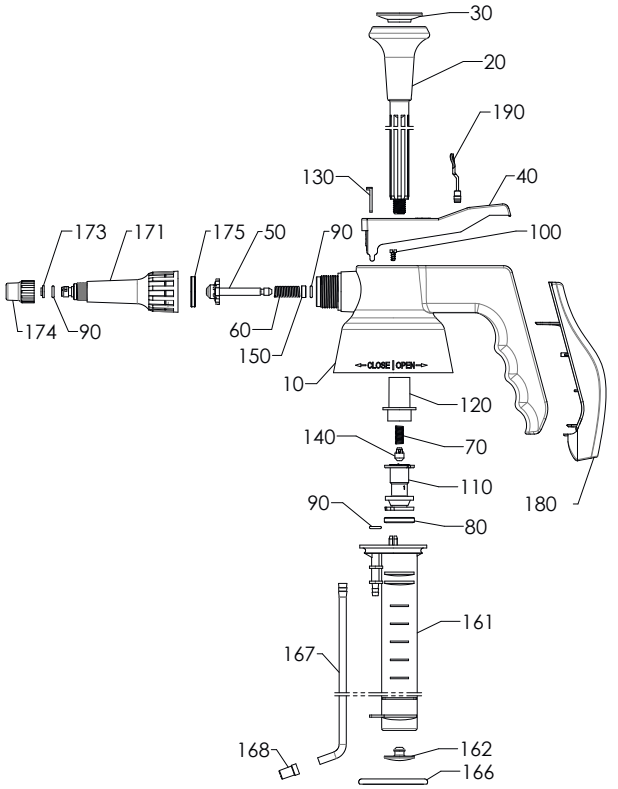

DO

pH value
2 up to 7

DON'T

- acidic solvents
- alkaline and alcoholic liquids
- aggressive solvent mixtures containing acetone, MEK
- pure solvents such as acetone and cleaners
- aggressive acidic liquids

Always release the pressure, completely empty the sprayer after use, and rinse it thoroughly with water or asuitable cleaning agent. This protects the seals and saves money. Lubricate the pump rod regularly.

You want more? ↗

OPERATING INSTRUCTIONS

Please read the operating instructions carefully before using the device, and keep them in a safe place.
If the device is passed on to a third party, it is imperative that these instructions also be passed on with it.
Ensure that the atomizer is compatible with the liquid you are using.

Preparation

- Check before use that all parts are undamaged and working correctly.
- Unscrew the pump from the tank.
- Fill the canister with liquid up to the "max" level.
- Screw the pump head on and tighten it so that the canister is sealed and airtight (if it is not, it will be impossible for pressure to build up).

Usage

- Pump air into the tank using the piston (around 20 to 30 pump movements).
  Important: It is not possible to generate more pressure in the tank than specified. The sprayers are fitted with an **automatic relief valve**.
- Press the spray button to spray. By turning the spray nut, you can set the desired spray pattern (mist ↔ jet).
  To use the continuous spraying function, use the lever and engage the arresting knob by pushing it forward. The continuous spray function is deactivated again by pulling back the arresting knob or by actuating the spray lever.
- The ability to spray evenly and without any problems is dependent on the use of a clean spray agent.
  Mix chemicals and water thoroughly prior to filling.
  Please note the usage instructions of the chemical manufacturer.

After usage

- Once you have finished spraying, unscrew the spray head slowly to allow the pressure to escape.
- Do not pour residues into drains; instead, dispose of them in accordance with the instructions of the manufacturer of the liquid. Then clean the pump by using it to spray clean water or a suitable cleaning agent.

Safety

- Never leave the tank in a pressurised state for long periods of time.
- Do not expose the Compressed Air Sprayer to direct sunlight.
- Do not fill any hot liquids exceeding 30° Celsius.
- Note the safety data sheet of the liquid's manufacturer.
- Information on the resistance properties of the plastic and seals of the Compressed Air Sprayer can be found under www.octo-pump.de.
- Never aim the sprayer at people or animals.
- The manufacturer is not liable for damage caused by incorrect usage or unauthorised modifications of the device.

Maintenance and care

- Oil the pump piston from time to time (see symbol on the spray button).
- Check that the nozzle and sieve at the end of the hose is free of deposits.
  Use compressed air to clean the nozzle or sieve if it is blocked.
- If a part is visibly damaged or worn, replace it. Only use original parts.

OCTOPUMP
Kläger Plastik GmbH | Kläger Spraying Technology | Portnerstraße 84 | 86356 Neusäß

OCTO PUMP
THE CHEMICAL SPRAYER



MASTERPIECE SOLVE+ 1000

CRUDE OIL BASED SOLVENTS & AGGRESSIVE MIXTURES

PART LIST

202	suction tube
201	angle piece
190	continuous spray function
180	ErgoGrip
175	seal
174	nozzle screw
173	nozzle
172	o-ring 5.0 x 1.5
171	swirl piece
168	filter
167	suction tube
166	bottle o-ring 36.0 x 4.0
165	valve screw cap
164	valve spring
163	valve plunger
162	o-ring 5.0 x 3.0
161	pump cylinder
150	retaining disk
140	plastic ball
130	clip
120	pump guide rod
110	plunger
100	screw
90	o-ring 5.0 x 1.5
80	o-ring 14.0 x 3.5
70	pressure spring
60	spring
50	swirl cone
40	trigger
30	lid rod
20	pump
10	sprayer top

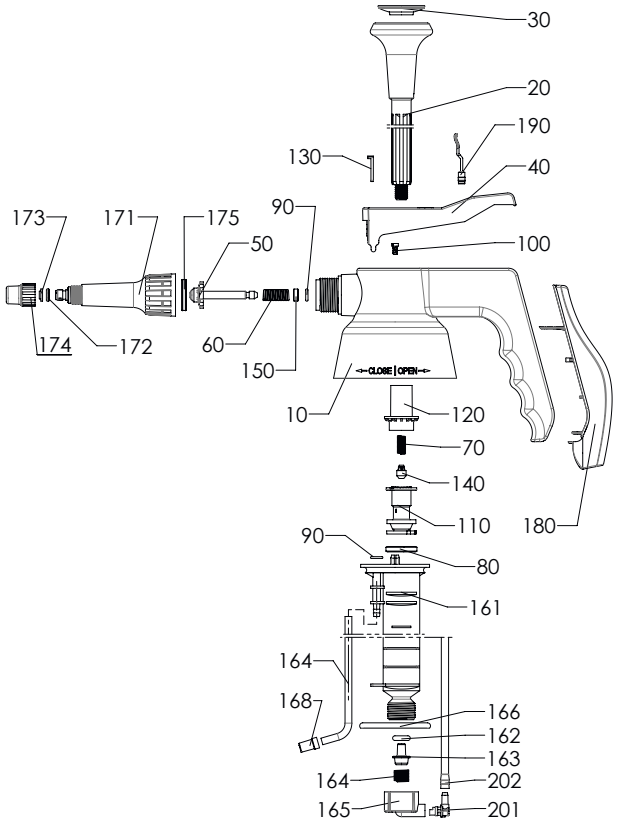

DO

- aggressive solvent mixtures containing acetone, MEK
- solvent-based liquids

DON'T

- acidic liquids
- alkaline and alcoholic liquids
- pure solvents such as acetone and cleaners
- aggressive acidic liquids

Always release the pressure, completely empty the sprayer after use, and rinse it thoroughly with water or asuitable cleaning agent. This protects the seals and saves money. Lubricate the pump rod regularly.

You want more? ↗

OPERATING INSTRUCTIONS

Please read the operating instructions carefully before using the device, and keep them in a safe place.
If the device is passed on to a third party, it is imperative that these instructions also be passed on with it.
Ensure that the atomizer is compatible with the liquid you are using.

Preparation

- Check before use that all parts are undamaged and working correctly.
- Unscrew the pump from the tank.
- Fill the canister with liquid up to the "max" level.
- Screw the pump head on and tighten it so that the canister is sealed and airtight (if it is not, it will be impossible for pressure to build up).

Usage

- Pump air into the tank using the piston (around 20 to 30 pump movements).
  Important: It is not possible to generate more pressure in the tank than specified. The sprayers are fitted with an **automatic relief valve**.
- Press the spray button to spray. By turning the spray nut, you can set the desired spray pattern (mist ↔ jet).
  The safety button must be pulled back before the spray button can be pressed.
- The ability to spray evenly and without any problems is dependent on the use of a clean spray agent.
  Mix chemicals and water thoroughly prior to filling.
  Please note the usage instructions of the chemical manufacturer.

After usage

- Once you have finished spraying, unscrew the spray head slowly to allow the pressure to escape.
- Do not pour residues into drains; instead, dispose of them in accordance with the instructions of the manufacturer of the liquid. Then clean the pump by using it to spray clean water or a suitable cleaning agent.

Safety

- Never leave the tank in a pressurised state for long periods of time.
- Do not expose the Compressed Air Sprayer to direct sunlight.
- Do not fill any hot liquids exceeding 30° Celsius.
- Note the safety data sheet of the liquid's manufacturer.
- Information on the resistance properties of the plastic and seals of the Compressed Air Sprayer can be found under www.octo-pump.de.
- Never aim the sprayer at people or animals.
- The manufacturer is not liable for damage caused by incorrect usage or unauthorised modifications of the device.

Maintenance and care

- Oil the pump piston from time to time (see symbol on the spray button).
- Check that the nozzle and sieve at the end of the hose is free of deposits.
  Use compressed air to clean the nozzle or sieve if it is blocked.
- If a part is visibly damaged or worn, replace it. Only use original parts.

OCTOPUMP
Kläger Plastik GmbH | Kläger Spraying Technology | Portnerstraße 84 | 86356 Neusäß

OCTO PUMP
THE CHEMICAL SPRAYER



MASTERPIECE ACID+ 1000

CONCENTRATED ACIDS

PART LIST

202	suction tube
201	angle piece
190	safety function
180	ErgoGrip
175	seal
174	nozzle screw
173	nozzle
172	o-ring 5.0 x 1.5
171	swirl piece
168	filter
167	suction tube
166	bottle o-ring 36.0 x 4.0
165	valve screw cap
164	valve spring
163	valve plunger
162	o-ring 5.0 x 3.0
161	pump cylinder
150	retaining disk
140	plastic ball
130	clip
120	pump guide rod
110	plunger
100	screw
90	o-ring 5.0 x 1.5
80	o-ring 14.0 x 3.5
70	pressure spring
60	spring
50	swirl cone
40	trigger
30	lid rod
20	pump
10	sprayer top

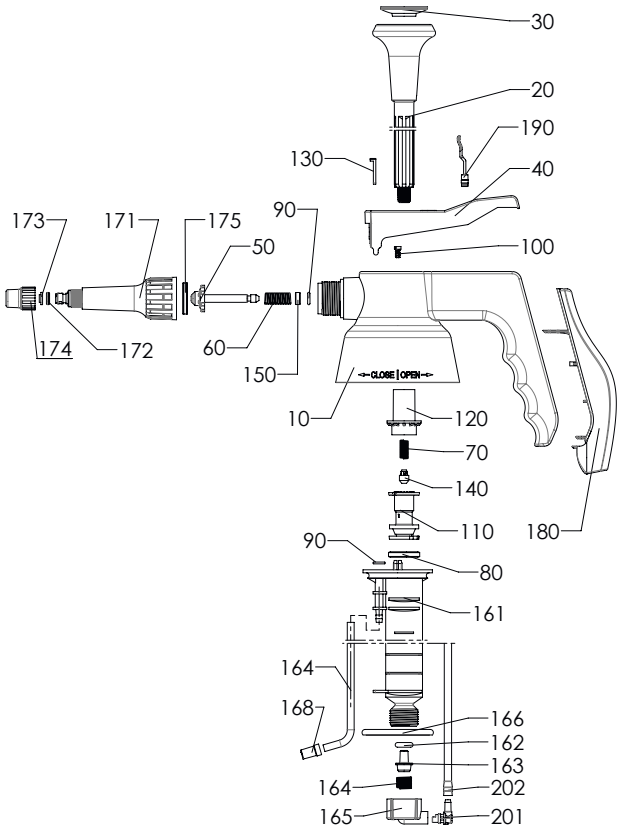

DO

- aggressive acidic liquids
- acidic liquids

pH value
<1 up to 9,5

DON'T

- solvent-based liquids
- alkaline and alcoholic solvents
- aggressive solvent mixtures with acetone, MEK
- pure solvents such as acetone and cleaners

Always release the pressure, completely empty the sprayer after use, and rinse it thoroughly with water or asuitable cleaning agent. This protects the seals and saves money. Lubricate the pump rod regularly.

You want more? ↗

OPERATING INSTRUCTIONS

Please read the operating instructions carefully before using the device, and keep them in a safe place.
If the device is passed on to a third party, it is imperative that these instructions also be passed on with it.
Ensure that the atomizer is compatible with the liquid you are using.

Preparation

- Check before use that all parts are undamaged and working correctly.
- Unscrew the pump from the tank.
- Fill the canister with liquid up to the "max" level.
- Screw the pump head on and tighten it so that the canister is sealed and airtight (if it is not, it will be impossible for pressure to build up).

Usage

- Pump air into the tank using the piston (around 20 to 30 pump movements). Important: It is not possible to generate more pressure in the tank than specified. The sprayers are fitted with an **automatic relief valve**.
- Press the spray button to spray. By turning the spray nut, you can set the desired spray pattern (mist ↔ jet). To use the continuous spraying function, use the lever and engage the arresting knob by pushing it forward. The continuous spray function is deactivated again by pulling back the arresting knob or by actuating the spray lever.
- The ability to spray evenly and without any problems is dependent on the use of a clean spray agent. Mix chemicals and water thoroughly prior to filling. Please note the usage instructions of the chemical manufacturer.

After usage

- Once you have finished spraying, unscrew the spray head slowly to allow the pressure to escape.
- Do not pour residues into drains; instead, dispose of them in accordance with the instructions of the manufacturer of the liquid. Then clean the pump by using it to spray clean water or a suitable cleaning agent.

Safety

- Never leave the tank in a pressurised state for long periods of time.
- Do not expose the Compressed Air Sprayer to direct sunlight.
- Do not fill any hot liquids exceeding 30° Celsius.
- Note the safety data sheet of the liquid's manufacturer.
- Information on the resistance properties of the plastic and seals of the Compressed Air Sprayer can be found under www.octo-pump.de.
- Never aim the sprayer at people or animals.
- The manufacturer is not liable for damage caused by incorrect usage or unauthorised modifications of the device.

Maintenance and care

- Oil the pump piston from time to time (see symbol on the spray button). Please only use silicone oil/greases for lubrication because of the EPDM seals.
- Check that the nozzle and sieve at the end of the hose is free of deposits. Use compressed air to clean the nozzle or sieve if it is blocked.
- If a part is visibly damaged or worn, replace it. Only use original parts.

OCTOPUMP
Kläger Plastik GmbH | Kläger Spraying Technology | Portnerstraße 84 | 86356 Neusäß

OCTO PUMP
THE CHEMICAL SPRAYER



MASTERPIECE CLEAN+ 1000

PURE SOLVENTS & CLEANING PRODUCTS

PART LIST

190	continuous spray function
175	ErgoGrip
175	seal
174	nozzle screw
173	nozzle
172	o-ring 5.0 x 1.5
171	swirl piece
165	filter
164	suction tube
163	bottle o-ring 36.0 x 4.0
162	membrane
161	pump cylinder
150	retaining disk
140	plastic ball
130	clip
120	pump guide rod
110	plunger
100	screw
90	o-ring 5.0 x 1.5
80	o-ring 14.0 x 3.5
70	pressure spring
60	spring
50	swirl cone
40	trigger
30	lid rod
20	pump
10	sprayer top

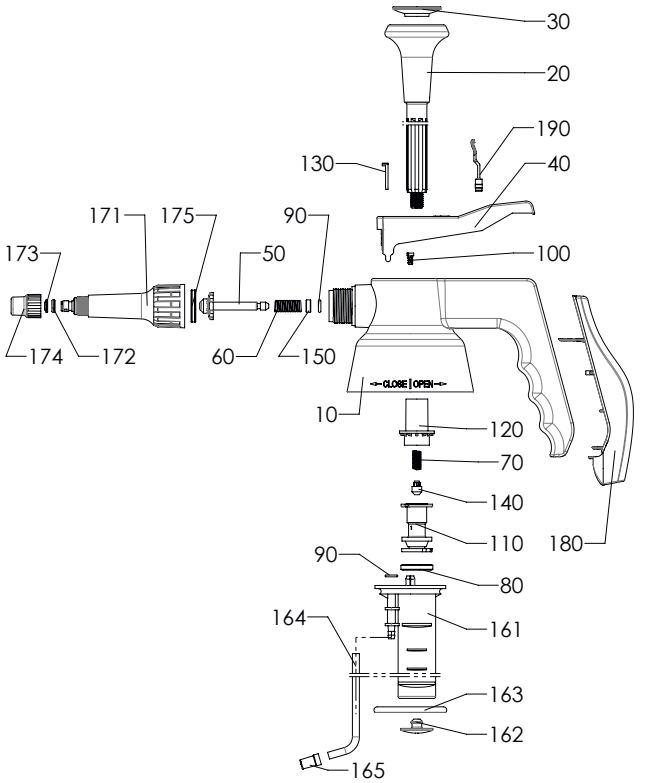

DO

- pure solvents such as acetone and cleaners
- solvent-based liquids

pH value
6 up to 7

DON'T

- acidic liquids
- alkaline and alcoholic liquids
- aggressive solvent mixtures containing acetone, MEK
- aggressive acidic liquids

Always release the pressure, completely empty the sprayer after use, and rinse it thoroughly with water or asuitable cleaning agent. This protects the seals and saves money. Lubricate the pump rod regularly.

You want more? ↗